MICROBOX 870

Expansion Box PC

front

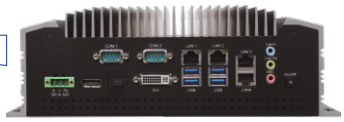

rear

Features

_ Intel 6th Gen. Skylake Core i7/i5/i3 CPU
_2 x SO-DIMM, up to 32GB
_2 x removable SATA drive bay
_4K UHD display with fanless design
_Multi-Expansion slot
_Support 2 x Pcle slot
_Three independent display port
_Wide range 9-36V DC power input

Specifications

System

Processor	Intel 6th Gen. Skylake Core i7/i5/i3 CPU with 35W TDP Support
System Chipset	Intel H170 Chipset
System Memory	2 x 260-pin SO-DIMM up to 32GB DDR4 2133/2400 Mhz

Outside IO Port

USB	4 x USB 3.0 type A, 2 x USB 2.0 type A
Serial/Parallel	3 x RS-232/422/485 DB-9, default RS-232 1 x RS-232 DB-9
Audio	1 x Line-in, 1 x Line-out, 1 x Mic
LAN	4 x GbE LAN RJ-45
Display Interface	1 x Display Port, 1 x DVI-I, 1 x HDMI
GPIO	1 x 4-in/4-out Digital I/O, 1-5V, 1-GND
Power	1 x 3-pin DC power input terminal, 1 x power button

Storage

Storage	2 x 2.5" SATA3 HDD bay (easy accessible), support RAID 0.1

Expansion

On Board Expansion Bus	3 x Mini Pcle slot full size (one shared with mSATA)
Expansion slot	2 X Pcle x1 slots or support 1 x Pcle x4 slot for Microbox 870

Power

Power Input	9-36V DC

Mechanical

Construction	Plating Titanium Gray Aluminum Heatsink, black steel Chassis
IP Rating	IP20
Mounting	Wall Mount
Dimension	277,8 x 230 x 86,7 mm
Net Weight	Microbox 870: 4.5 kg

Environmental

Operating Temperature	-10_50°C
Storage Temperature	-30_70°C
Storage Humidity	10_90° 40°C non-condensing
Certificate	CE/FCC Class A

Operating System Support

Windows Embedded 8.1 Industry Pro
Windows Embedded 8.1 Standard
Windows 10 IOT 2016

Ordering Information

Microbox 870 (Barebone)	Fanless Box PC, Intel 6th Core i CPU, 2 x SO-DIMM, DDR4 slots, 2 x 2.5" HDD space, 3 x mini-PCIe slots, DC 9-36V power input with adaptor, Steel Chassis with Aluminum Heat sink

Dimensions

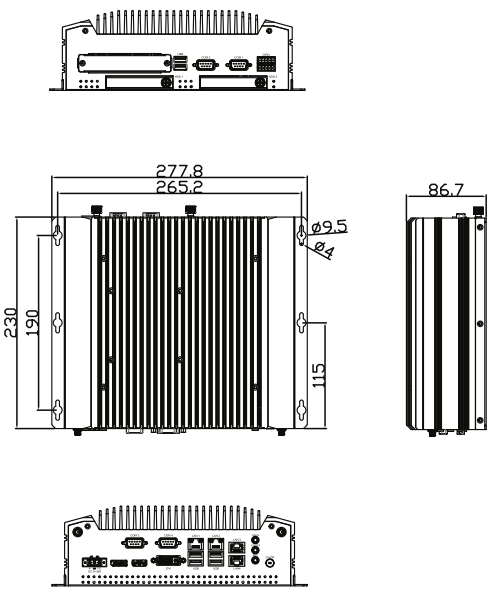

unit: mm
tollerance +/- 0.5

HARDWARE SOLUTIONS